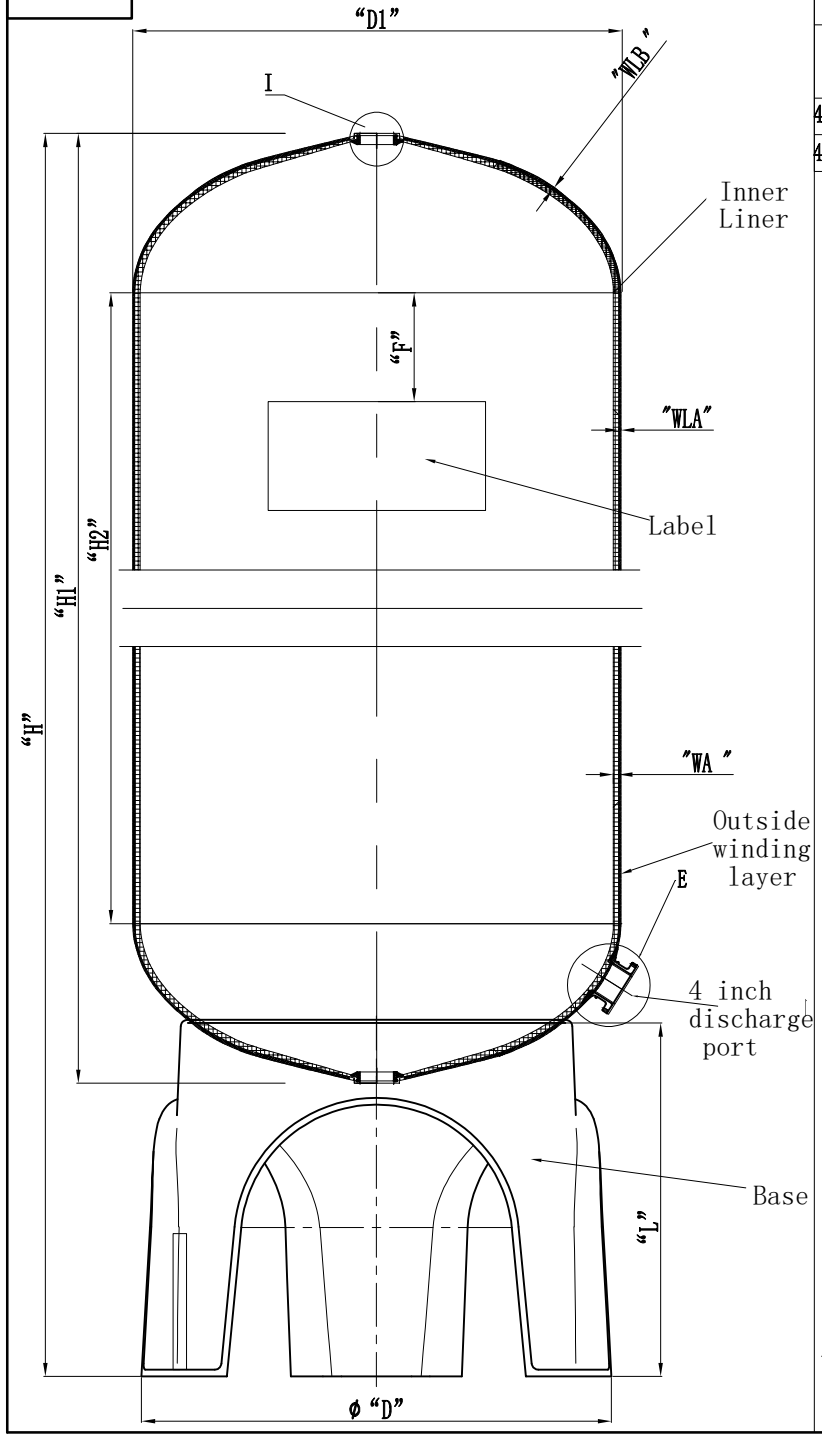

Technical Parameters

Model	Opening Size	VOL (Ltrs.)	Size Parameters (mm) D1	D	H±25	H1	H2	L	F	WA	WLA	WB	WLB	Base	Weight (kg)
40×65	4065-4-4-D	1087.1	985	1000	1950	1650	1065	438	100	15	8	11	4	Triangular	101±7
40×79	4079-4-4-D	1257.5	985	1000	2310	2010	1400	438	100	15	8	11	4	Triangular	117±7

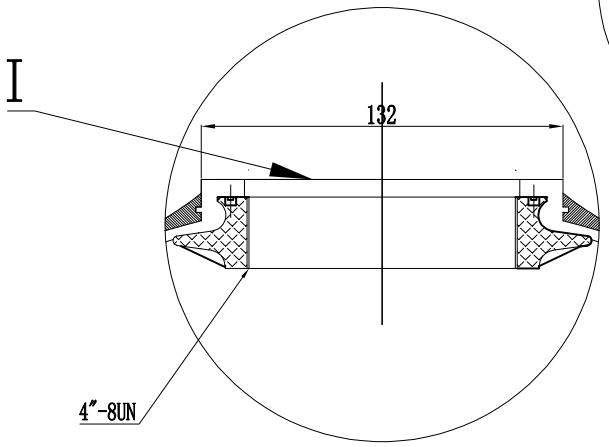

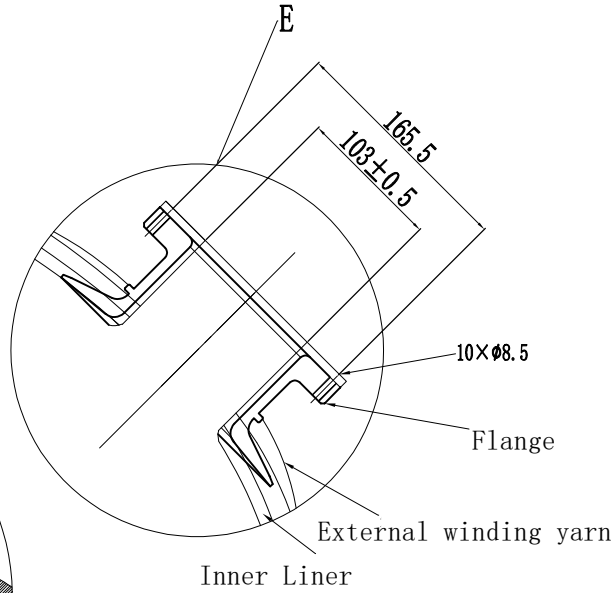

4"-8UN internal thread	
Middle Dia	3.918-3.930"
Min Dia	3.865-3.875"
Max Dia	4.000-4.010"

Note:

1. The vacuum valve must be installed on the device.

2. Operation Instructions
A. Max working pressure: 10.5Bar(150Psi)
B. Temperature Range: 1-50℃(34-127℉)
C. Maximum vacuum: 17Kpa (5" Hg)

Remark
1. Product type identification see outer packaging logo.
2. The product color is consistent with the color of the tape packaging box.

Sign	Signature	Date
Designer	Chengyang Sun	2024.7.16
Review	Jingwei Hu	2024.7.18
Approve		

Hebei Chengda WaterTechnology Co., Ltd.

Material:	FRP	Projection:	
Model:	40",4"T/B With 4-inch lower discharge port	Name:	FRP tank
Version number:	00		Drawing No.: CD-22-09-28/93
Please don't measure the size of the drawing.	Unit: mm	1 Page	Page 1